SolidHub

OPERATING INSTRUCTIONS

Electric pallet stacker

HE1200/3

Please read this manual before using the product and follow the instructions it contains!

CONTENT

GENERAL

MAINTENANCE

FOREWORD

Congratulations on the purchase of your new HE1200/3 electric forklift truck. This easy-to-use forklift truck is made of high-quality materials, specially designed for long-lasting and reliable use. For your own safety and for the correct operation of the truck, it is essential that you read and follow these operating instructions before using the truck.

Keep these operating instructions in a safe place. Check the truck for transport damage. Defective electric forklift trucks must not be taken into use. The stacker is used to electrically raise and lower the transport load to the desired height. Improper handling may result in injury or damage to the machine. SolidHub shall not be liable for damage that results from improper use of the electric forklift or failure to comply with the instructions and rules of these operating instructions. The owner / operator must ensure that the electric forklift truck is used correctly by trained and authorised personnel.

SAFETY INSTRUCTIONS

- Be sure to read the warning labels on the truck and the instructions in this manual before use.
- Do not operate the truck unless you are familiar with it and have received detailed instruction.
- Do not use the truck unless you have checked that it is in perfect condition. Pay particular attention to the chain, wheels, drawbar, chassis, control unit, mast, battery, etc.
- Do not use on heavily soiled floors or in explosive environments.
- Use only on level ground. Do not carry out work on slopes.
- It is forbidden to carry people on the forks.
- When lifting the forks, make sure that no one is standing or walking under the forks.
- Wear gloves when using the forks.
- Do not transport goods at a height above 300 mm. The heights above 300 mm are exclusively for storing and retrieving goods.
- Maintain a safety distance of 600 mm when transporting / lifting goods.
- Always distribute the weight of the goods evenly on both forks. Never use only one fork. The centre of gravity of the goods should be in the middle of the two forks.
- Observe the goods during transport. If the goods become unstable and threaten to fall / tip, stop the operation
- immediately with the emergency stop button.
- Do not load beyond the maximum capacity.
- Operation must take place in at least 50 lux lighting.
- Suitable for indoor operation at a room temperature between + 5 °C and + 40 °C.
- Carry out maintenance according to the regular inspection.
- Charging the battery should be done in a dry and ventilated place, away from open fire.
- Comply with country-specific standards and regulations.
- Modifications and changes to the device not approved by the manufacturer will void the warranty.

TECHNICAL DATA

CHARACTERISTICS

Type	Unit	Value
Brand		SolidHub
Model		HE1200/3
Rated traction weight	Q (kg)	1200
Lift	h3 (mm)	3000
Capacity at highest height	kg	750
Service weight (includes battery)	kg	465
Load centre	c (mm)	600
Axle centre to fork face	x (mm)	710
Wheel base	y (mm)	1154
Controller		CURTIS

DIMENSIONS

Type	Unit	Value
Height of mast, lowered	h1 (mm)	2000
Height of mast, extended	h4 (mm)	3424
Fork height, lowered	h13 (mm)	86
Overall length	l1 (mm)	1755
Length to fork face	l2 (mm)	605
Overall width	b1 / b2 (mm)	795
Fork dimensions	s / e / l (mm)	60 / 160 / 1150
Width of forks	b5 (mm)	570
Min. ground clearance	m2 (mm)	24
Aisle width with pallet 1000 x 1200 across forks	Ast (mm)	2068
Aisle width with pallet 800 x 1200 along forks	Ast (mm)	2034
Min. turning radius	Wa (mm)	1366

WHEELS

Type	Unit	Value
Wheels type		Polyurethane
Driving wheel size	ø x w (mm)	ø 210 x 70
Bearing wheel size	ø x w (mm)	ø 80 x 70
Additional wheels (dimensions)	ø x w (mm)	ø 150 x 58
Wheels, number front / rear (x = driven)		1 x + 1 / 4

PERFORMANCE

Type	Unit	Value
Travel speed, with / without load	km/h	4.0 / 4.2
Lifting speed, with / without load	mm/s	92 / 136
Lowering speed, with / without load	mm/s	112 / 98
Max. gradeability, with / without load	%	6 / 8
Service brake		Electromagnetic brake

DRIVE

Type	Unit	Value
Drive motor, output S2 60 min.	kw	0.75
Lift motor rating at S3 15%	kw	2.2
Battery accoring to DIN 43531/35736 A,B,C,no		no
Battery voltage	V	2 x 12
Rated capactiy	Ah	100
Battery weight (+ / - 5 %)	kg	2 x 27

OTHERS

Type	Unit	Value
Noise level at operator‘s ears	dB(A)	69
Steering type		Mechanical steering

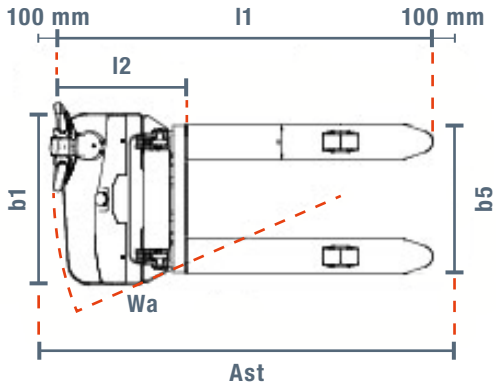

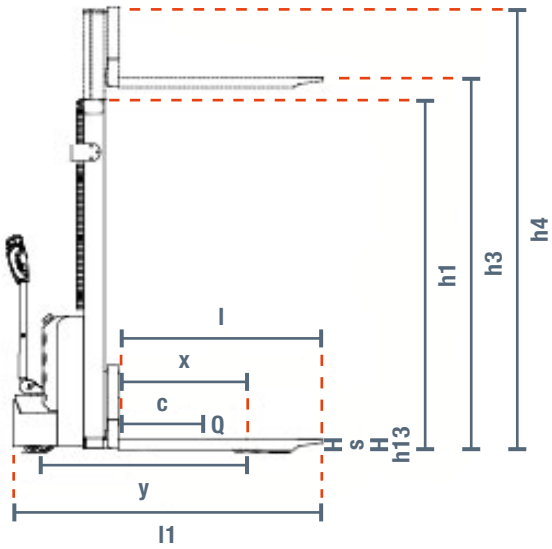

OVERVIEW OF THE MAIN COMPONENTS

No.	Name
1	Cover
2	Emergency stop button
3	Protective grille
4	Pole
5	Charging interface
6	Drive housing
7	Inner housing
8	Drawbar
9	Lifting cylinder
10	Lowering button

No.	Name
11	Lift button
12	Accelerator (butterfly switch)
13	Horn
14	Safety switch (belly switch)
15	Key switch
16	Drive wheel
17	Steering wheel
18	Fork
19	Load wheel

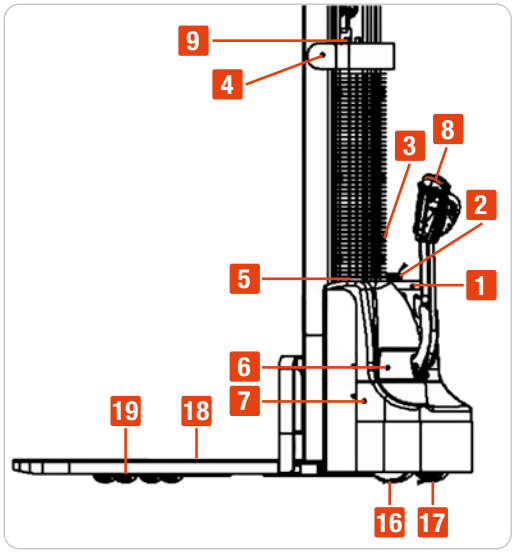

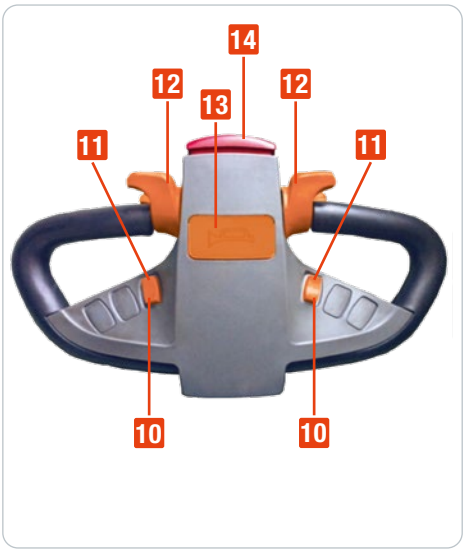

SAFETY DEVICES AND WARNING SIGNS

A Warnings: - Do not stand under the forks
- Do not ride on forklift truck

B Load curve symbol
C Note: Read and follow the instructions
D Nameplate
2 Emergency stop switch, tiller button
14 Safety switch, belly switch

The truck has an emergency stop switch (2), which stops all lifting, lowering and driving functions and activates the electromagnetic brake. After activating this function pull the switch out again.

Insert the key (16) and turn it clockwise. For safety and to prevent unauthorised use, the key must be turned anticlockwise and pulled out.

The instructions on the safety labels must be followed. Please replace any damaged or missing safety stickers immediately.

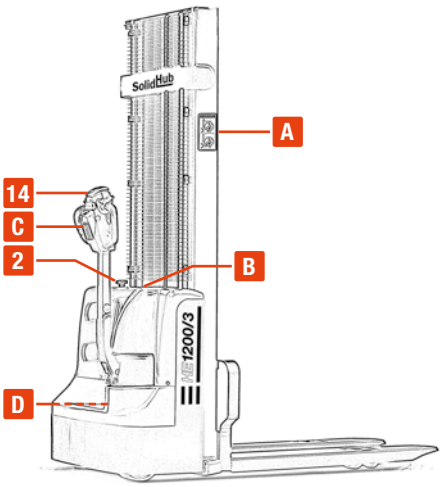

NAMEPLATE

No.	Description
1	Model
2	Configuration number
3	Rated capacity
4	Maximum lifting height
5	Rated voltage
6	Serial number
7	Total weight
8	Total weight (without battery)
9	Weight of battery (maximum)
10	Weight of battery (minimum)
11	Manufacturer
12	Date of manufacture

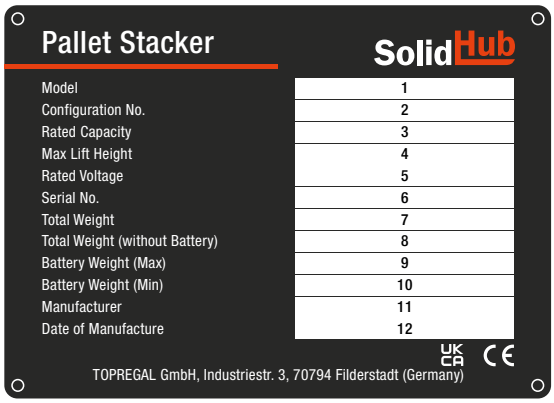

OPERATING INSTRUCTIONS

When operating this truck, please observe the warning and safety instructions. Make sure that you always look in the direction of travel and that no goods or objects obstruct or restrict your view.

Ensure that goods are placed stably and securely in the centre of the forks for transport. To start turn the key clockwise to the ON position (15). Press the horn (trumpet symbol) to start the signal tone (13).

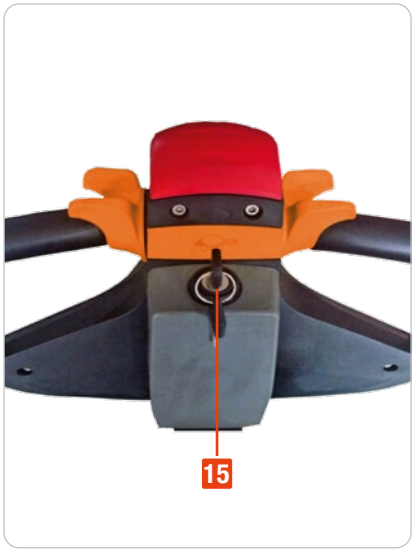

PARKING

Never park the truck on a slope or sloping terrain! This truck is equipped with an electromagnetic parking brake. Always set the forks to the lowest position when not in use and park the truck in a safe area. Turn the key anticlockwise to the OFF position and remove the key.

LOAD CURVE

The load curve shows a given load centre C [mm], the horizontal load capacity of the largest load Q [kg] and the lifting height H [mm] corresponding to the vehicle.

With a load centre of 600 mm and a maximum lifting height H of 3000 mm, the maximum load capacity Q is about 750 kg.

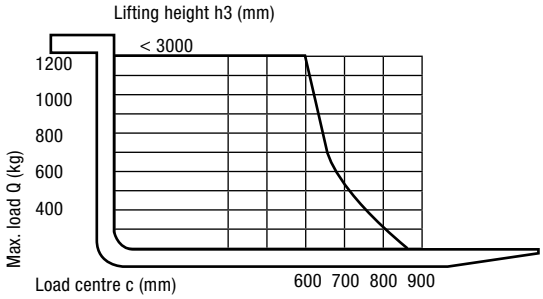

LIFTING LOADS

Never load the truck beyond the specified capacity. The maximum load capacity of this high lift truck is 1200 kg. Place the fork completely under the goods to be lifted and operate the lift button (11) until the goods have reached the desired lift height.

LOWERING LOADS

Carefully press the down button and observe the goods. As soon as the weight has been reduced and the pallet is secure, carefully pull out the forks.

CONTROL

Start the truck, move the tiller to a tilted position „F“. Operate the direction lever on the tiller (12): Forward „V“ or Reverse „R“. By carefully moving the direction lever, you control the speed until the desired speed is reached.

Position the direction lever in the centre to slow the truck to a complete stop / parking position. When the vehicle is permanently stopped, apply the parking brake. Always drive carefully and keep an eye on the roads - regulate the speed if necessary.

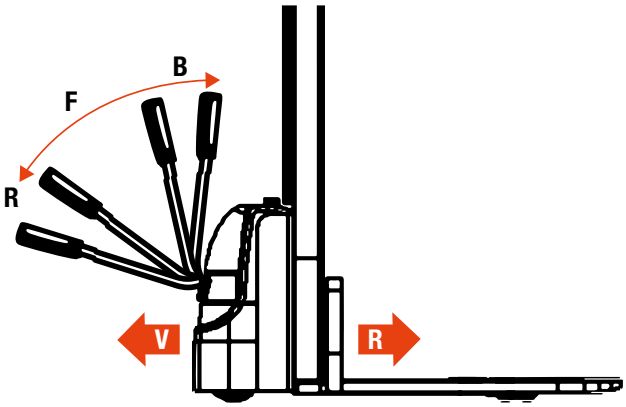

APPLY BRAKES

The performance of the load braking system depends on the on the ground conditions and the load of the truck. Activate the brake function as followed:

By moving the directional lever (12) back to the position „0“ or by releasing this lever the vehicle brake is activated. Or by moving the direction lever in the opposite direction until it starts to move in the other direction. When the drawbar is moved up or down into braking zone „B“, the vehicle braking is activated. When the emergency stop switch is actuated, the handle is is automatically brought into the braking zone and the parking brake is activated. By means of the belly switch at the head of the drawbar, this function can also be triggered with the upper body.

The truck slows down and comes to a standstill up to reverse „R“.

TROUBLESHOOTING

If there is a fault and / or the truck does not work, please stop using the truck and press the emergency stop button (2). Park in a safe area, turn the key switch (15) anticlockwise and remove the key. Immediately inform the responsible employee and / or contact the customer service.

IN CASE OF EMERGENCY

In an emergency, press the emergency stop button (2). All electrical functions are stopped. Keep a safe distance.

CHARGING AND REPLACING THE BATTERY

- Only qualified personnel should carry out battery repair. Follow the instructions in the user manual.
- These batteries are maintenance free and must not be filled with water.
- Battery recycling must comply with government laws and regulations. Please comply with
- Improper handling, e.g. use near fire or gas, can cause an explosion! The storage of flammable materials or flammable liquids is prohibited in the battery charging area. Smoking is prohibited and the area must be well ventilated.
- Before charging or installing the battery, park the truck safely (parking position).
- Carry out maintenance work before connecting the wiring harness correctly and trouble-free to other parts of the vehicle.
- Only the use of the sealed lead-acid battery is permitted, the additional battery weight has an influence on the behaviour of the vehicle.

Please observe the maximum operating temperature of the battery. If the electric stacker is not used for a longer period of time, you should charge it for at least 2 hours per week to avoid deep discharge.

REPLACING THE BATTERY

Park the stacker securely on a level surface. Switch off the truck, remove the key and press the emergency stop button. Unscrew the 2 screws on the main cover, remove the outer main cover. First loosen the screws (negative terminal indicator „-“), then the screws (positive terminal indicator „+“) and the wiring harness. Next, unscrew and remove the battery holder. Do not touch any circuit boards or cables when removing the battery! Proceed in reverse order when reinstalling. Connect the positive terminal of the battery to avoid damaging the truck.

POWER METER / VOLTMETER

Fully charged battery

CHARGING THE BATTERY

After approximately 4 hours (normal load) the battery of the electric truck must be charged. Charge the battery only in well ventilated areas. When charging is complete, disconnect the plug from the mains and store it safely in the in the chassis. When the battery is completely discharged, the charging process takes approx. 7 hours. Avoid discharging the battery of more than 80 % of the charging capacity to ensure a long battery life.

MAINTENANCE

HYDRAULIC OIL

Please check the oil level every 6 months. The oil should be hydraulic oil: ISO VG32, its viscosity should be 32 cSt at 40 °C, the total volume is about 4.0 litres.

DAILY USE CHECK AND MAINTENANCE

Inspect the truck daily before use, paying particular attention to the wheels and axles. Foreign objects such as cloths / rags etc. can block wheels, forks, mast or the chain. Unload the forks and lower them to the lowest position after you have finished your work.

- Visually check for damage to pipes and wires. Look for scratches, deformations and cracks.
- Check for leaks in the hydraulic system.
- Check the driving behaviour when driving straight ahead.
- Check the chain and roller for damage or corrosion.
- Check that the wheel moves smoothly.
- Operate the emergency stop button to check the emergency brake function.
- Check brake function, check handle lever switch.
- Press the buttons to check the lifting and lowering function.
- Check for damage and that the protective grille is correctly installed.
- Check the horn.
- Check that all bolts and nuts are tight.
- Check the function of the key switch.
- Check the speed limit switch (symbol: turtle).

REGULAR INSPECTIONS

Only qualified and trained personnel should service the truck. Before servicing, please remove any goods from the forks and move them to the lowest position (parking position of the forks).

Only use special cranes / lifting equipment to lift the truck. Make sure to use an additional safety device (such as a jack, wedge or wood) under the truck. Take special care when servicing the handlebar. The gas spring is under pressure. Carelessness during maintenance is a source of accidents. Use only approved original spare parts. Please note that leakage of hydraulic oil can lead to machine failure and possibly an accident. Only allow a technician trained to work on the pressure control valve to carry out the work. If you have to replace a wheel, please follow the instructions above. The impeller must be round and show no abnormal wear. Service the electric truck regularly using the checklist provided in the operator‘s manual.

The respective inspection points (plus equipment identification) for the periodic inspections/thorough examinations are to be checked in an integrated manner in the associated inspection report of the lifting equipment, taking into account the mandatory fulfilment of the Lifting Operations and Lifting Equipment Regulations 1998 (LOLER).
(Recommendation: FEM4.004)

GREASING POINTS

The illustration shows the points that must be greased regularly. Grease specification: DIN51825, standard grease.

No.	Name
1	Wheel bearing
2	Steel frame
3	Chain
4	Hydraulic system
5	Steering bearing
6	Gearbox

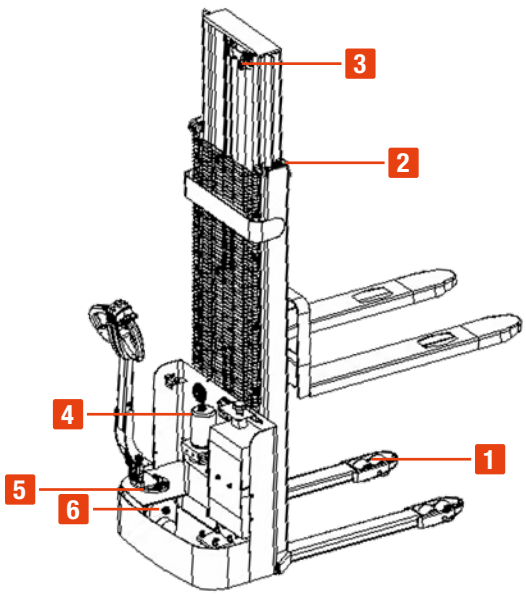

MAINTENANCE / INSPECTION CHECKLIST

		Monthly intervals			
		1	2	6	12
1	Check the hydraulic oil cylinder, the piston is noisy and there is no fluid leakage		•		
2	Check the hydraulic connections and hoses for damage and leaks		•		
3	Check the hydraulic oil level and top up with oil if necessary			•	
4	Replace hydraulic oil after 6 months or 1500 hours of operation			•	
5	Check the setting of the pressure valve function (at 1000 kg max. 10 %)				•
	Mechanics				
6	Check the fork for deformation or cracks		•		
7	Check the chassis for deformation or cracks		•		
8	Check that all bolts are tight		•		
9	Check the chassis and chain for corrosion, deformation or damage. Replace the chain if necessary	•			
10	Check the gearbox for unusual noises and leaks		•		
11	Check the wheels / rollers for deformation and / or damage. Replace if necessary		•		
12	Lubricate the steering				•
13	Check and grease nipple		•		
14	Check grease nipple	•			
15	Protective and / or guard board, replace if damaged	•			
	Electrical system				
16	Check if wires are damaged		•		
17	Check electrical connections and the terminal block		•		
18	Check the emergency stop switch for function		•		
19	Check the electric motor for unusual noises		•		
20	Check the indicator for function		•		
21	Check inserted fuses, replace if necessary		•		
22	Test the horn		•		
23	Check the contacts		•		
24	Check that the frame is tight (insulation test)		•		
25	Check the function and wear of the accelerator		•		
26	Check the drive motor of the electrical system		•		
	Brake system				
27	Check the braking performance; if necessary, replace the brake discs or adjust the adjust the distance between the brakes		•		
	Battery				
28	Check the battery voltage		•		
29	Clean and check for corrosion or damage		•		
30	Check if the battery housing is damaged		•		
	Functions				
31	Test the beeper	•			
32	Checking the electromagnetic brake with air gap	•			
33	Test the emergency brake function	•			
34	Testing the reverse braking and regenerative braking function	•			
35	Test the emergency stop belly switch	•			
36	Check the steering function	•			
37	Check the lifting and lowering function	•			
38	Check the drawbar functions	•			
39	Check the key switch for damage	•			
40	The limit switch for the detection speed (the lifting height is >~300 mm)	•			
	Other				
41	Check that all safety instructions and warning signs are complete	•			
42	Check if the protective grille is damaged	•			
43	Check the tiller if it is worn for height adjustment or replacement		•		
44	Carry out a test run	•			

TROUBLESHOOTING

Problem	Cause	Solution
The forks cannot be to the maximum height be raised	Max. load capacity overcharged	The maximum load capacity is indicated on the name plate
	Battery is too weak	Check the battery charge and recharge it
	The fuse is out	Check and possibly replace the fuse
	The hydraulic oil is not sufficient	Check and, if necessary, top up the hydraulic oil
	The oil pressure is too low; oil leaks	Check and if necessary replace sealing hoses and / or cylinders
No oil	Oil level is too low	Increase the oil level
The forks cannot be be lowered	Locking valve is dirty / blocked	Check the hydraulic oil and control valve. Change the hydraulic oil if necessary
	Electromagnetic valve opens or is damaged	Check or replace solenoid valve
The stacker does not react	The battery is charging	When the battery is fully charged, unplug the truck
	The battery is not connected	Connect the battery correctly to the charger
	The fuse is out	Follow the safety instructions in the section „Replacing the Battery“ section
	Battery is too weak	Check the battery‘s charge status and recharge it
	The emergency stop switch is activated	Pull the button to reset the emergency stop switch
	The tiller is not in the correct position	Move the tiller out of the braking zone
Forklift only moves in one direction	Accelerator / connections are damaged	Check the accelerator and the connection
Stacker runs very slow	Battery is too weak	Check the battery charge level and recharge it
	The electromagnetic brake is activated	Release the electromagnetic brake
	The tiller is not connected properly or cable is damaged	Check the wiring
The stacker starts suddenly	Damage to the control unit	Replace the control unit
	The accelerator does not return to the centre position	Repair or replace the accelerator

SERVICE & CONTACT

Contact our product experts and find help and solutions for your product. Here you will find all contact information listed by country and language: www.topregal.co.uk/en/service

Responsible for the content:
TOPREGAL GmbH
Industriestrasse 3
70794 Filderstadt
GERMANY
www.topregal.com

UKCA Declaration of Conformity

The manufacturer

TOPREGAL UK Ltd.
Carlton Drive Crumlin,
Gwent NP11 4EA

hereby declares that the following product

Product designation:	Type:
SolidHub electric forklift	**HE1200/3**

Serial number:

HE1200/3-1000000000 - HE1200/3-9999999999

that the equipment is in conformity with the following relevant UK legislations and applied standards:

2006/42/EC Machinery Directive
2014/30/EC EMC Directive

Applied standards:

EN ISO 12100
EN 1175-1
EN 12053
EN 13059
EN 16307-1
EN ISO 3691-1/AC
EN 12895,
EN 61000-6-1
EN 61000-6-3

Name and address of the person who is authorized, compile the technical documentation:

TOPREGAL UK Ltd.
Carlton Drive Crumlin,
Gwent NP11 4EA

Place: Crumlin
Date: 24.05.2022

Juergen Effner
Chief Executive Officer

SolidHub

V 28.03.24