TOPREGAL®

ASSEMBLY INSTRUCTIONS

Cantilever rack

Typ KR3000-M

Please read this manual before using the product and follow the instructions it contains!

CONTENT

GENERAL INFORMATION	Explanation of terms	3
	Overview	4
NOTE	General information	6
	Assembly preparation	7
	Technical regulations	8
PARTS LIST	Individual parts & assembly material	10
ASSEMBLY	Overview uprights	12
	Assembly instructions	13
	Upright assembly	14
	Strut assembly	15
	Cantilever assembly	16
INSTRUCTION MANUAL	Load & weight distribution	17
	Inspection & checks	17
	Handling	17
	Instructions for use	18
INSPECTION	Rack inspection	19
ACCESSORIES	L / U-profile collision protection	20
	Crash-protection rail	20
	Crash protection bollard	20
	Magnetic tape	20
	Rubber strip	21
	Cantilever separator	21
	Wooden / Galvanised mesh shelf	21

EXPLANATION OF TERMS

CANTILEVER LOAD

- Total load per cantilever
- Maximum 500 kg

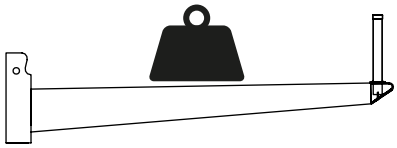

UPRIGHT LOAD CAPACITY

- Max. 1500 kg with single-sided upright
- Max. 3000 kg with double-sided upright

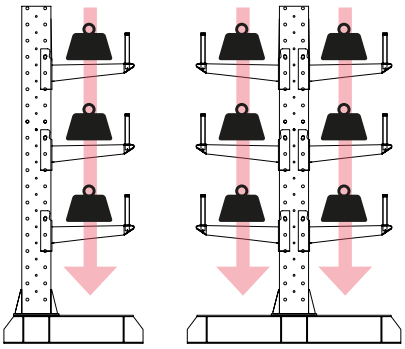

single-sided double-sided

UNIT WIDTH

Inner dimension between two stands.
Field widths for individual use can be combined with each other.

100 cm
- Diagonal brace per field 129.1 cm
- Cross strut per field 92.6 cm

150 cm
- Diagonal brace per field 199.8 cm
- Cross strut per field 142.6 cm

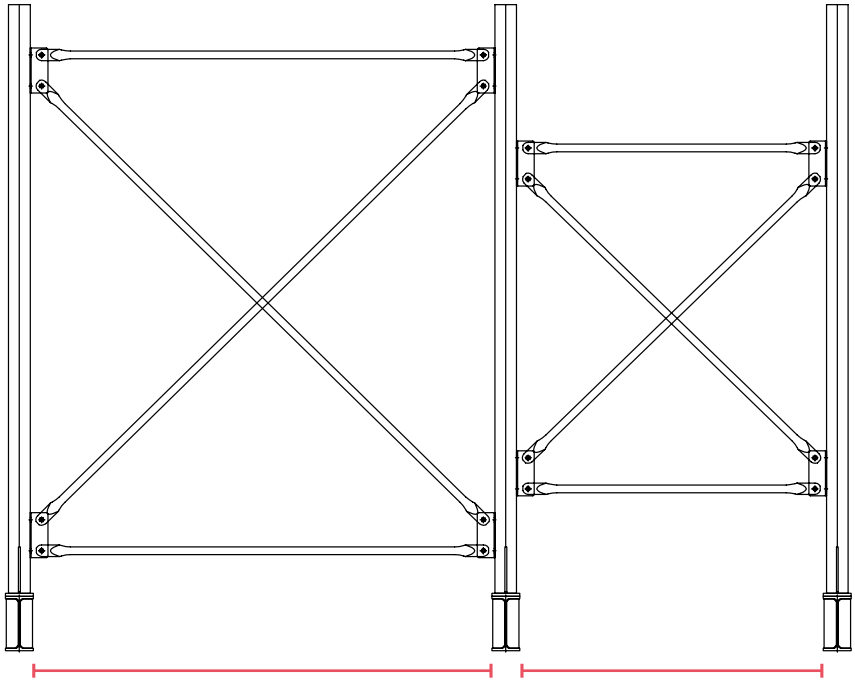

Load capacity
The information on load capacity refers to a shelf with at least 2 bays and at least 2 shelves, which are evenly suspended in height.

OVERVIEW

Complete upright

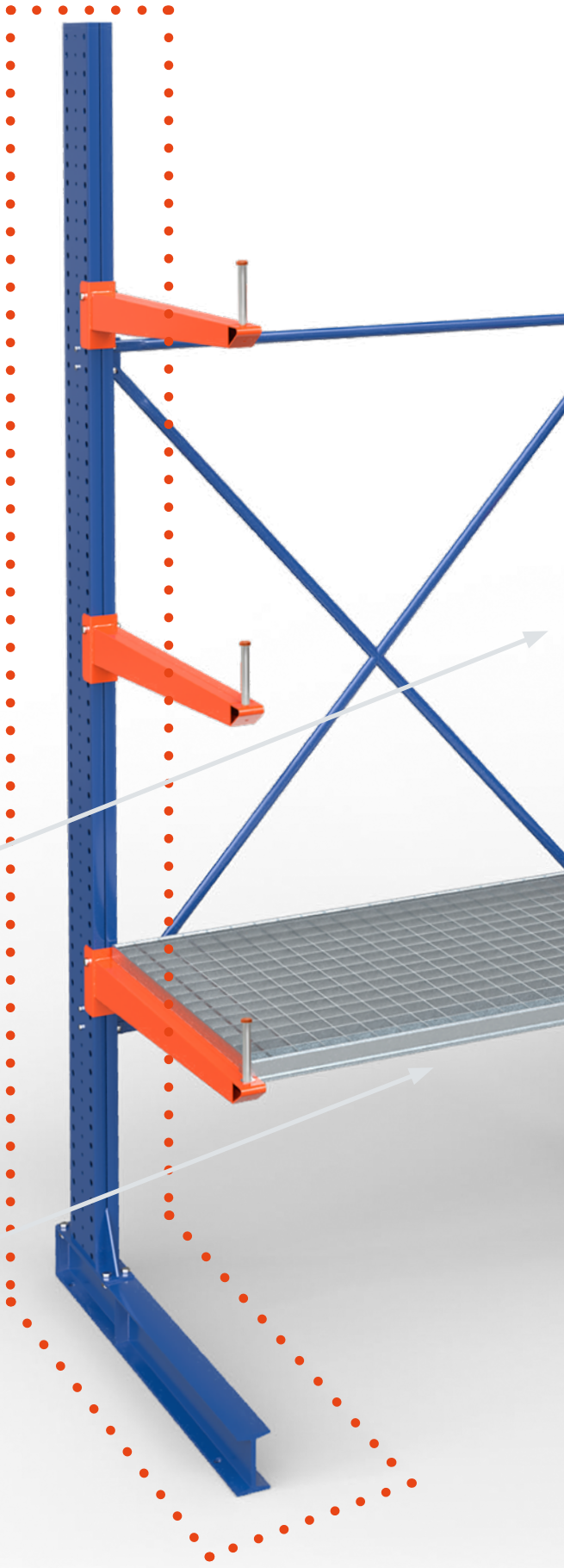

UPRIGHT

A complete upright consists of a blue upright profile, which is fastened to the foot part by a screw connection.

Screwed cross and diagonal struts connect the upright with the next upright. This distance is called the axial dimensions.

CANTILEVERS

Cantilevers serve as load carriers and can be attached to the upright in 50 mm increments at individual heights.

The cantilever is secured by a safety bolt.

Our cantilevers are available in lengths of 50 cm, 100 cm and 125 cm.

DECKS

Using the shelves the rack can be loaded with pallets, parcels or transport boxes, for example. In addition, the shelves prevent goods from falling and your stored goods from sagging between the cantilevers.

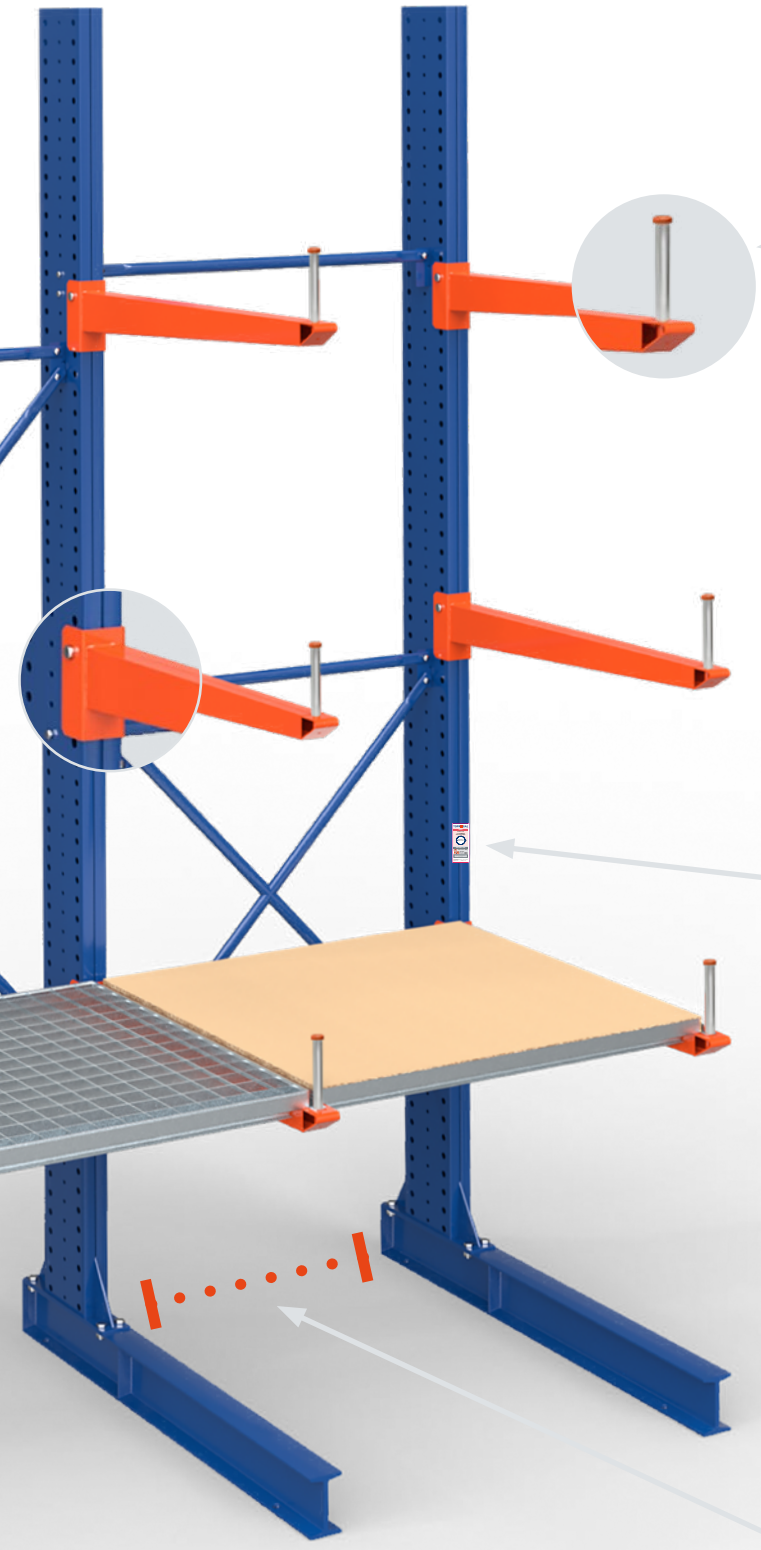

ROLL-OFF SAFETY DEVICE

To protect the load from accidental falling, roll-off protection can be attached at the end of the cantilever. This is supplied as standard.
The safety device can be plugged into or unplugged from any cantilever as required.

LOAD CAPACITY LABEL

Self-adhesive load capacity label displaying load capacities – complies with DIN EN 15635 specifications.

The load capacity label is always supplied and must be attached to the rack in a clearly visible place.

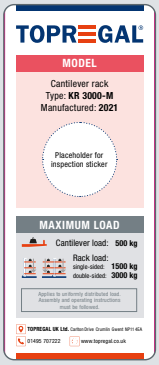

UNIT WIDTH

The unit spanned between two uprights indicates the unit width. Our standard unit widths are 100 cm and 150 cm. These can be freely combined within a rack row.

GENERAL INFORMATION

PREVENT DANGERS

The TOPREGAL product you have purchased is manufactured in accordance with the current state of the art and complies with the applicable regulations and rules. Nevertheless, it may pose a danger to people and property if:

- the rack is not properly assembled, improperly modified or converted.
- accessories used are not original ones.
- the safety regulations are not observed.

Therefore, every person involved in the assembly must read and follow the safety regulations and, if necessary, you should have them confirm this with a signature.

ACCIDENT PREVENTION REGULATIONS

All relevant accident prevention regulations apply:

- Generally accepted safety regulations.
- Country-specific provisions.
- Guidelines for storage facilities and equipment of the respective country.

PLEASE NOTE

Before assembly, commissioning or use, the information contained in these instructions must be observed. If you need technical support, please contact us.

In order to avoid personal injury and damage to property, please observe the following:

- the guidelines of the storage facilities and equipment DIN EN 15635 in the current issue.
- the relevant workplace directives and regulations.
- the information from your safety officer.
- the structural conditions and regulations, in particular the condition and load-bearing capacity of the floor.
- And ensure that the facilities are in good order and condition. Damaged or deformed components must be replaced immediately. If in doubt, stop installation or use, secure the installation area and inform your safety officer.
- that loading may only be carried out after all assembly work has been completed.
- that the persons carrying out the assembly and conversion work are to be secured against falling in accordance with the local accident prevention regulations.
- protective clothing such as helmets, gloves, safety shoes, etc. must be worn during assembly and conversion.
- that the racks must be effectively protected against impact from forklifts or other vehicles.
- that if you install our shelving system yourself, a subsequent acceptance test by a certified shelving inspector in accordance with DIN EN 15635 is mandatory.

ASSEMBLY PREPARATION

All original TOPREGAL components used to stabilise the warehouse equipment must be attached without restriction. These include in particular frame components, unit connections, diagonal struts, cantilevers, floor anchors, screws / fastening elements and safety pins. The screws must be pre-fastened by hand and later tightened using suitable tools such as a cordless drill or a wrench. During assembly one should ensure that the screws are not over-tightened.

PLANNING

Before the racks are assembled, the area intended for them is measured and the position of the rows of shelves is recorded. Tape measure and chalk line are best suited for this. When setting up the machine, please note that the intended rack row spacing is not the same as the aisle width. The required work aisle width can be obtained from the manufacturer of the control unit or from your safety officer. Traffic routes for powered or track-bound conveyors must be wide enough to ensure a safety distance of at least 0.5 m on both sides of the conveyors. The space required for manoeuvring operations must also be taken into account when measuring the required space. The safety distance is not needed if access by persons is prevented by structural measures.

TESTING OF FLOOR AND FLOOR TOLERANCES

Before installing rack systems, check the following:

- whether the load-bearing capacity of the floor is suitable for safely withstanding the intended loads. In case of doubt, ask a specialist and have the load capacities determined. The responsibility for the correctness of the information lies with the client.
- the surface of the floor: a proven concrete slab, min. 200 mm thick, concrete quality C 20 / 25 is required.

Assembly
Racks may only be set up and converted in accordance with the assembly and operating instructions supplied by us. Racks may only be converted when they are not loaded.

TECHNICAL REGULATIONS

BASIC STRUCTURE

The uprights are connected to the foot section by screw connections and then fixed in the load-bearing base. The cantilevers are attached by simple plug-in construction with bolts and safety pins!

The racks must be designed so that the cantilevers do not project beyond the base of the foot, unless stability is ensured by other means. With cantilever racks, it must be ensured that the stored goods cannot fall out. This is achieved by inserting the roll-off safety devices, which are included in the delivery volume (see DIN EN 15635).

SAFETY DISTANCES

During assembly, the exact location of the rack must be marked on the floor beforehand. The necessary safety distance to building components (e.g. wall, column) and corridors must be observed (see DIN EN 15635).

FLOOR CONDITION

The minimum component thickness of the floor is 200 mm, the minimum drill hole depth 150 mm. The flatness of the floor must be guaranteed according to FEM 9.831 and German DIN 18202. The minimum concrete quality is C 20 / 25.

LABELLING

Labelling using a load capacity label is compulsory. These labels are included in the delivery volume.

PLUMB INSTALLATION

The rack must be plumb. To compensate for uneven floors, height adjustment plates are to be used.
The individual uprights within a row of racks must be aligned.

Deviations of the rack uprights from the plumb line in longitudinal and depth direction of the racks must not exceed 1 / 200 of the rack upright height.

EXAMPLE: RACK UPRIGHT HEIGHT 4 METRES

$$\frac{\text{Shelf height h}}{200} = \text{max. deviation}$$

$$\frac{400\text{ cm}}{200} = 2\text{ cm}$$

The maximum deviation in longitudinal and transverse direction must therefore not exceed 2 cm.

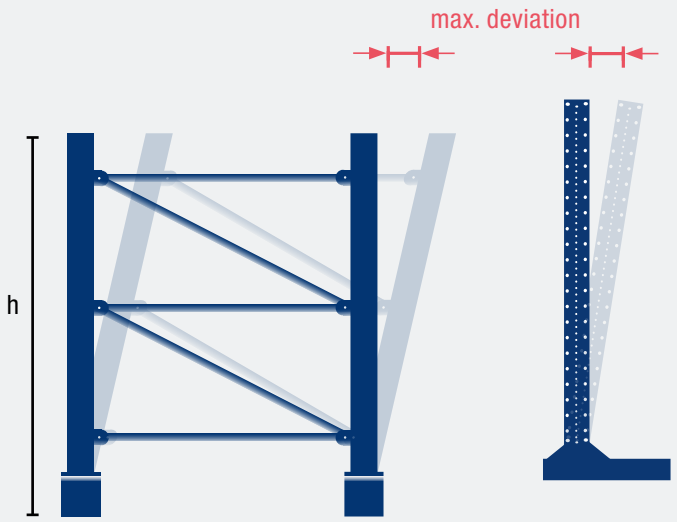

A UPRIGHT PROFILE

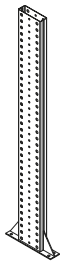

B DIAGONAL STRUT

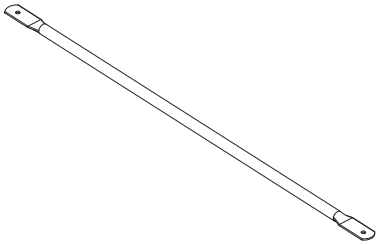

C CROSS STRUT

D ANGLE PLATE FOR CROSS STRUTS

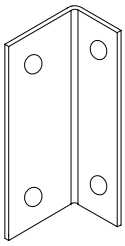

E HEXAGON SOCKET SCREW M10 X 25

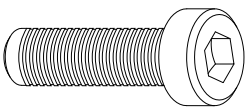

F CANTILEVER

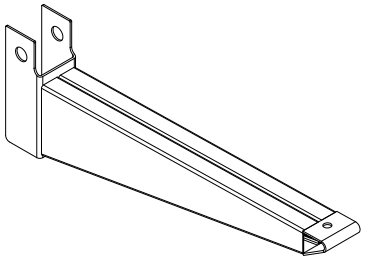

G SOCKET PIN + SAFETY PIN

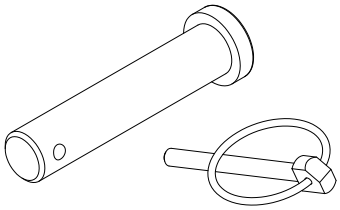

L M10 HEXAGON NUT

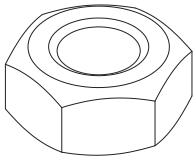

H ROLL-OFF PROTECTION

M HEXAGON SOCKET SCREW M16 X 55

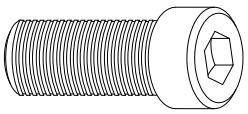

I FOOT PART

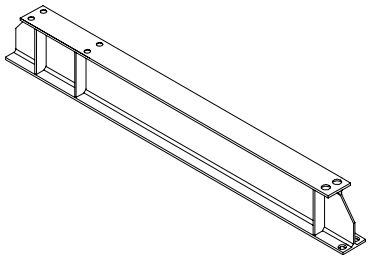

N HEXAGON NUT M16

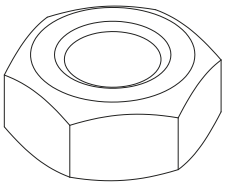

J HEXAGON SOCKET SCREW M10 X 90

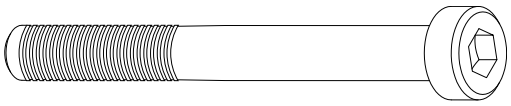

O M10 X 110 BOLT ANCHOR

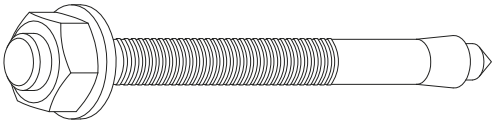

K M16 WASHER

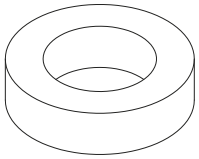

P COMPENSATING WEDGE

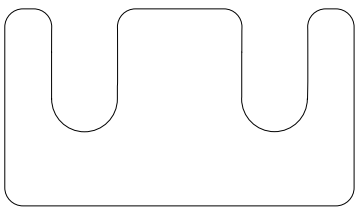

OPTIONAL ACCESSORIES - ARE AVAILABLE ON REQUEST.

OVERVIEW UPRIGHTS

FIELD WIDTH 1 M

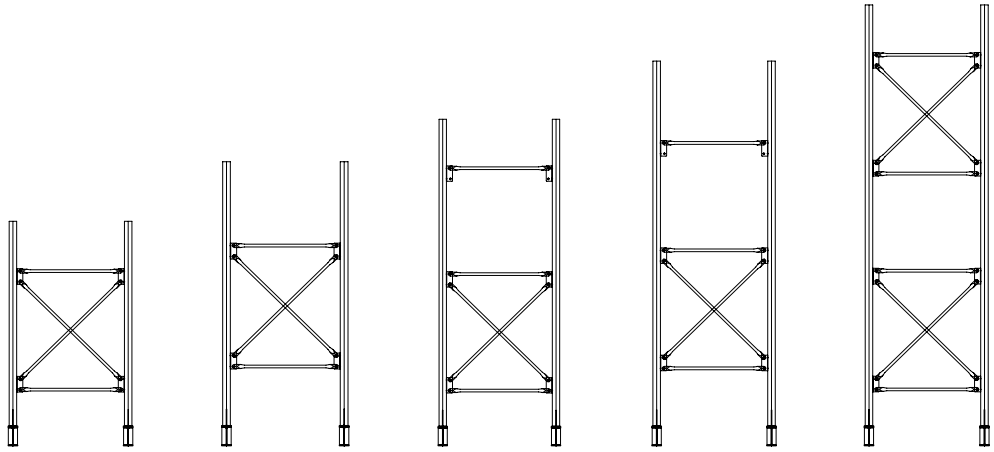

Height	208.5 cm	258.5 cm	308.5 cm	358.5 cm	408.5 cm
Cantilever length	50 cm/100 cm/125 cm	50 cm/100 cm/125 cm	50 cm/100 cm/125 cm	50 cm/100 cm/125 cm	50 cm/100 cm/125 cm
No. Cross struts	2	2	3	3	4
No. Diagonal struts	2	2	2	2	4
Angle plates	4	4	6	6	8
Colour	RAL 5005	RAL 5005	RAL 5005	RAL 5005	RAL 5005

FIELD WIDTH 1,5 M

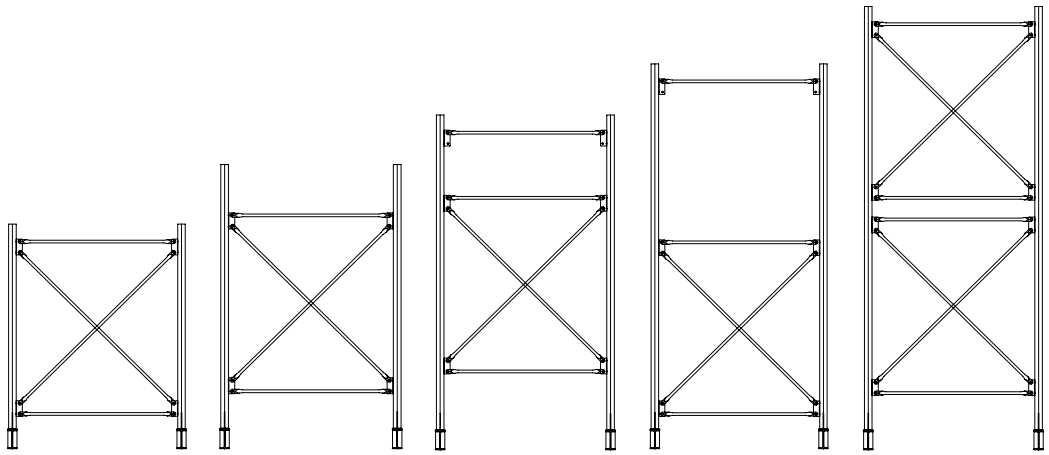

Height	208.5 cm	258.5 cm	308.5 cm	358.5 cm	408.5 cm
Cantilever length	50 cm/100 cm/125 cm	50 cm/100 cm/125 cm	50 cm/100 cm/125 cm	50 cm/100 cm/125 cm	50 cm/100 cm/125 cm
No. Cross struts	2	2	3	3	4
No. Diagonal struts	2	2	2	2	4
Angle plates	4	4	4	6	6
Colour	RAL 5005	RAL 5005	RAL 5005	RAL 5005	RAL 5005

ASSEMBLY TIPS

CROSS AND DIAGONAL STRUTS

The number of cross and diagonal struts varies depending on the height of the rack, please refer to page 10.
For the arrangement of the struts see info box below.

DO NOT OVER-TIGHTEN SCREWS!

Screws are first hand-tightened and only tightened after the entire frame has been assembled – using suitable tools such as a cordless drill or a wrench.

Bracing - perforation

Depending on the height of the stand, the cross braces must be fitted in the corresponding hole.
The number of struts to be fitted depends on the height of the rack.

The assembly of the uprights in step 2 (page 13) is to be carried out according to the number of the diagonal and cross braces.

Between the individual angles are from bottom to top at 1 m field length,
to leave 8 holes free, with 1.5 m field length there are 13 holes.

Field width 1 m

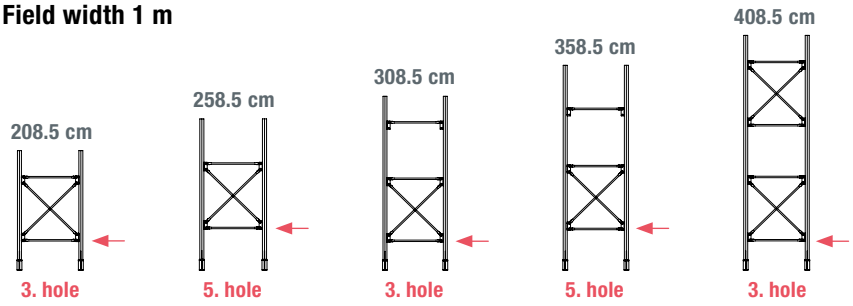

Field width 1.5 m

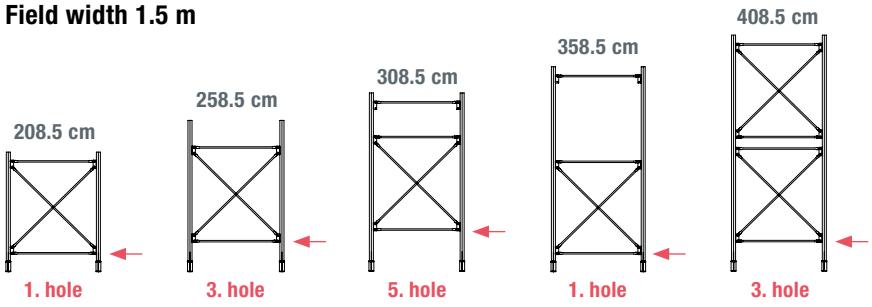

Example for 3rd hole

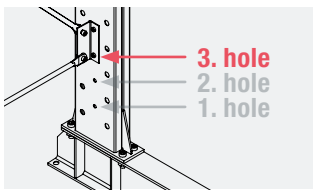

UPRIGHT ASSEMBLY

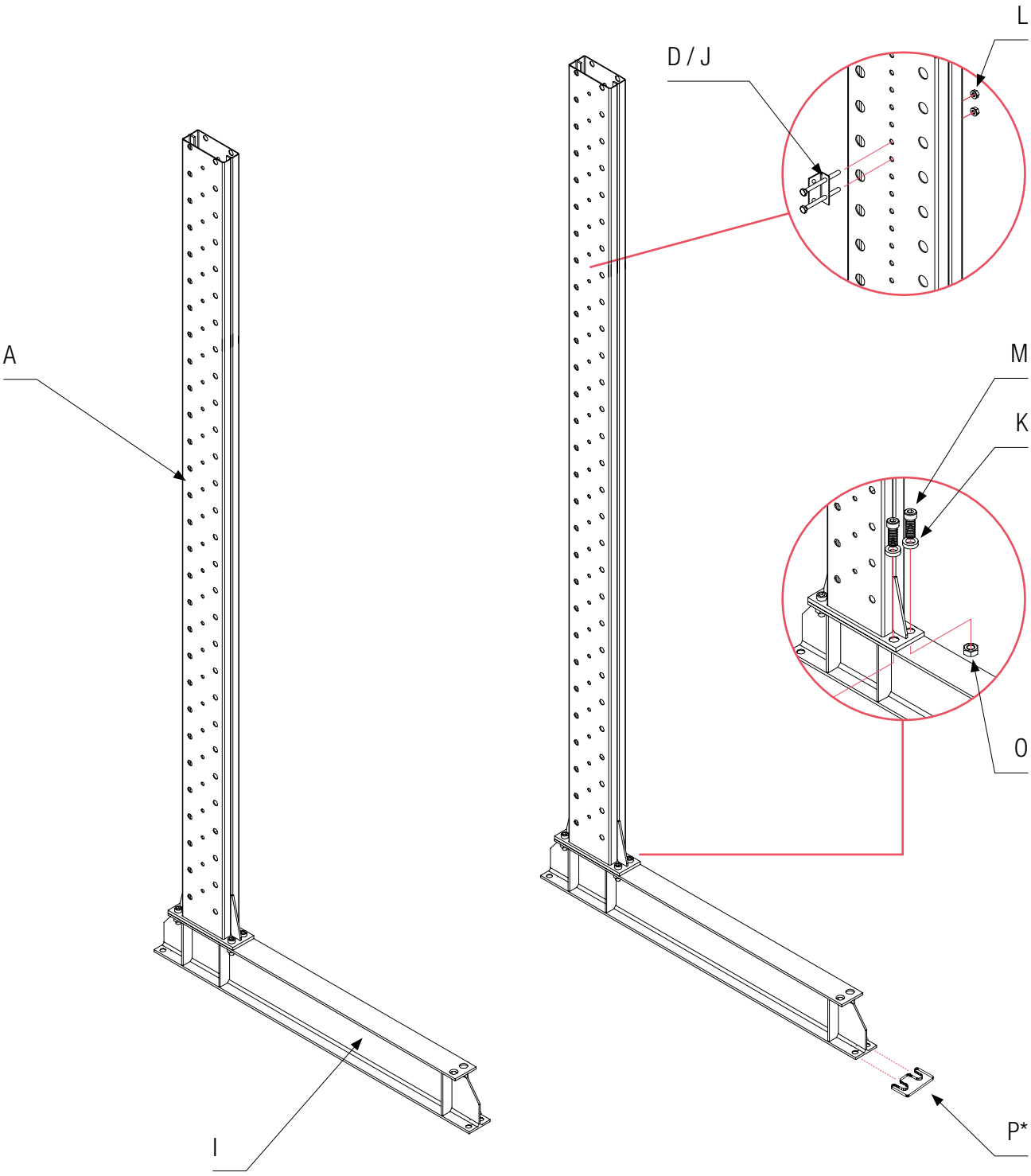

1. Place stand profile **A** on foot part **I** and fasten with screws **M**, nuts **N**, washers **K**.
   Tighten the screws to a maximum of 180 Nm!

2. Fasten angle plate **D** with screws **J**, nuts **L**.

   Note: Between the individual angles are from bottom to top at 1 m field length,
   to leave 8 holes free, with 1.5 m field length there are 13 holes.

P*) OPTIONAL ACCESSORIES - HEIGHT COMPENSATION PLATE IS AVAILABLE ON REQUEST.

STRUT ASSEMBLY

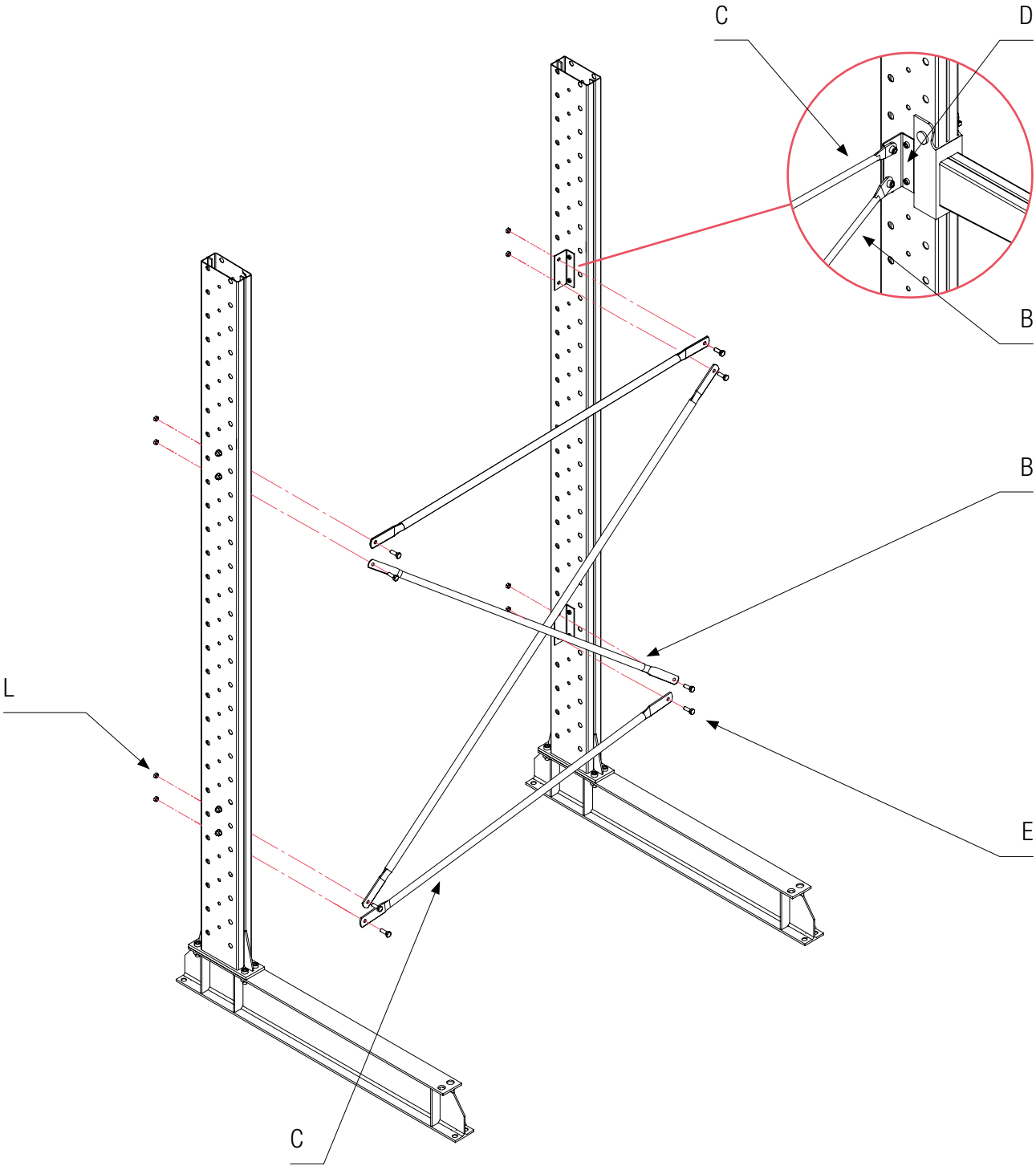

1. The first cross strut **C** with bolt **E**, nut **L** and washer **N** on the lowest retaining plate of a stand.
2. The first diagonal strut **B** together with the cross strut just attached to the retaining plate of opposite stand.
3. Attach the free end of the diagonal brace and the next cross brace to the next retaining plate.

CANTILEVER ASSEMBLY

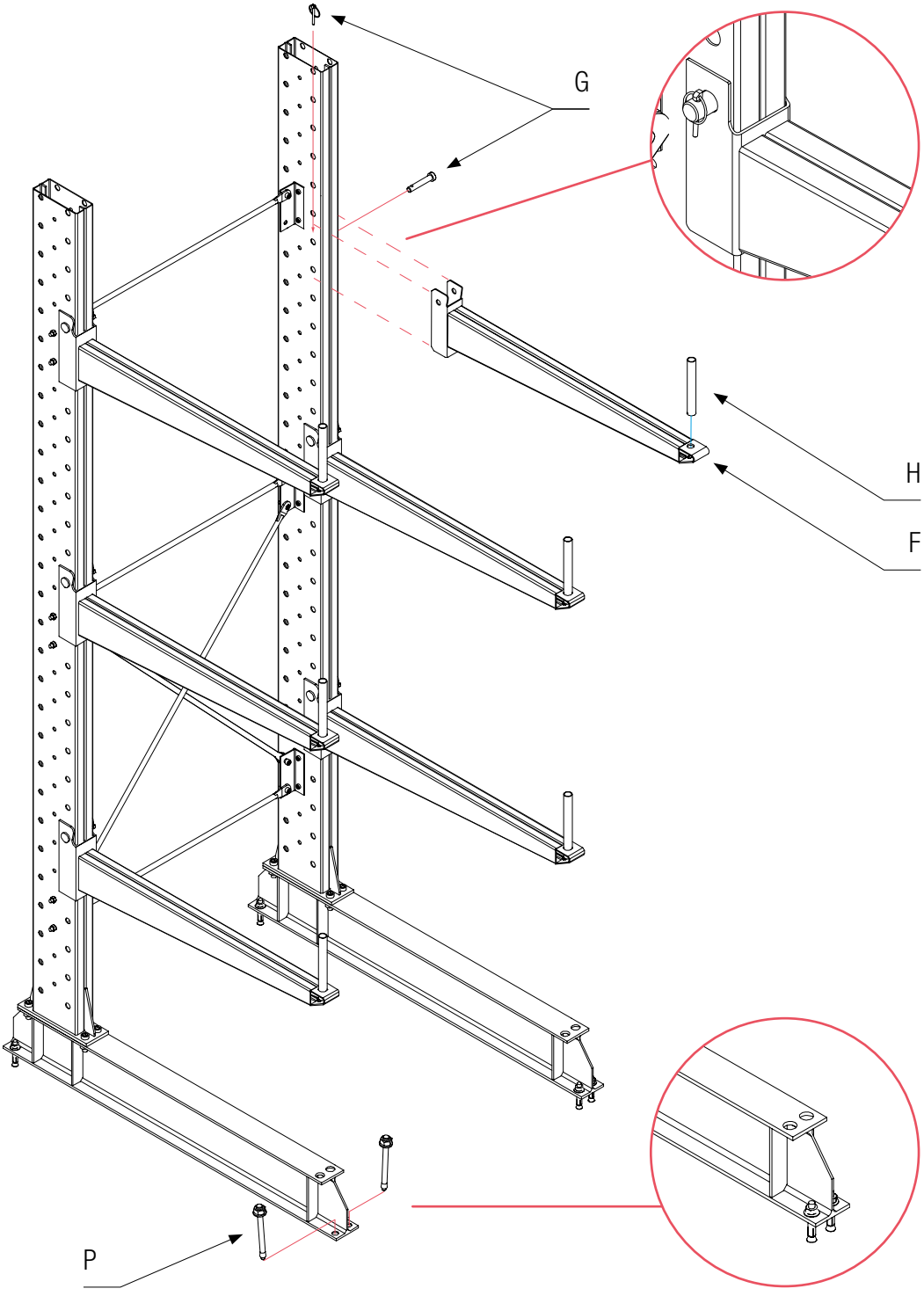

1. Place cantilever arms **F** at the desired position.
2. Insert the socket pin **G** across the arm and stand and secure it with the corresponding safety pin.
3. Insert the roll-off guard **H** in the holes provided in the cantilever arms.
4. Anchor the foot section to the floor with bolt anchors **P**.

LOAD & WEIGHT DISTRIBUTION

- Loads refer to cantilever racks with min. 2 units.
- The specified, evenly distributed load for cantilever and upright must not be exceeded.
- Care must be taken to ensure that the stored goods are evenly distributed on the shelves.
- The load units must not be dropped on them.
- Racks may only be loaded according to our specifications. The loading of the racks must be evenly distributed, as the static design is based on the assumption of an evenly distributed surface load. Point impact loads and sliding loads must therefore be avoided.
- For base units (2 uprights, 1 unit) the upright load is reduced by 30 %.

INSPECTION & CHECKS

- Has the rack been assembled according to the assembly instructions?
- Are parts of the construction damaged?
- Are there damages due to impact or overload on beams and/or uprights?
- Are the rack supports perpendicular?
- Are there any cracks in the weld seams or in the base material?
- What is the condition and effectiveness of the safety devices?
- What is the condition of the building floor?
- Is the load evenly distributed, are the racks too heavily loaded?
- What is the position of the load unit on the rack?
- Is the stability of the load units given?

HANDLING

- **The racks must always be assembled in accordance with the information in the assembly instructions. Unauthorised changes to the racks are not permitted in any form.**
- Appropriate load capacity stickers are to be affixed to all rack rows. These operating instructions must also be made available to the warehouse workers.
- Local alterations to the racks or the repositioning of cantilevers may only be carried out when they are not loaded.
- People must not stand on racks.
- Damaged and deformed rack parts must be replaced immediately, as the load-bearing capacity is only guaranteed in an undamaged condition. Therefore, damaged components must not be used any further.
- **The sum of all cantilever loads must not exceed the maximum upright load.**
- A collision of industrial trucks (e.g. forklift trucks) with the rack uprights can lead to a massive impairment of the rack's load-bearing capacity and must therefore be avoided under all circumstances.
- In general, all accident prevention regulations and the statutory provisions for work safety also apply.

INSTRUCTIONS FOR USE

GENERAL

People must not stand on rack uprights and shelves, in particular cantilevers.

OPERATING THE RACKS

The centre of gravity of the load must be aligned so that it is stable. Damaged and deformed load-bearing components of a rack system must be replaced immediately, as the load-bearing capacity can only be guaranteed in perfect condition. The persons involved in assembly and dismantling must be secured against falling in accordance with the local accident prevention regulations.

PERMISSIBLE LOAD CAPACITIES

- Cantilever load = 500 kg / cantilever.
- Upright load = 1500 kg single-sided / 3000 kg double-sided.
- The stored goods that are directly on the foot parts are not taken into account. The sum of all compartment loads must not exceed the maximum unit load. Compartment loads are evenly distributed loads.
- The storage of heavier loading units than those specified by us and indicated on load instructions is not permitted.

NOTE FOR STACKING DEVICES

The forklift truck must meet suitable requirements for the stored goods. The stored goods must be securely supported and the permissible load capacity of the forklift truck must not be exceeded. The respective manufacturer's instructions must be observed.

Load capacity
The information on load capacity refers to a rack with at least 2 units and at least 2 compartment levels, which are evenly suspended in height.

RACK INSPECTION

The DIN EN 15635 points out the responsibility of the operator to keep the racks in a proper condition. To this end, visual inspections and expert inspections must be carried out at regular intervals on the shelves to ensure safety. The following aspects, among others, must be examined:

- Are the rack supports perpendicular?
- Are there any cracks in the weld seams or in the base material?
- What is the condition and effectiveness of the safety devices?
- What is the condition of the building floor?
- What is the position of the load unit on the rack?
- Are load capacity labels and information notes available and up-to-date?
- Is the stability of the load units given?

The inspections carried out, defects and their remedy are to be documented in writing. This documentation is to be kept at least until the next regular inspection. However, it is advisable to keep the documentation for the entire service life of the rack (cf. DIN EN 15635).

PERSONS QUALIFIED FOR INSPECTION

Qualified persons are those who can demonstrate specialist knowledge from recent professional activity in the environment of the test object and appropriate further training. These are e.g. fitters from the manufacturer or appropriately qualified personnel of the operator.

VISUAL INSPECTION

- Visual inspections are to be carried out on a weekly basis.
- Visual inspections may be carried out by a competent internal person.

EXPERT INSPECTION

- Expert inspections are to be carried out at least every 12 months.
- The comprehensive expert inspection should be carried out by an expert, usually external person, and a comprehensive inspection protocol should be written.

Do you have questions about rack inspection or would you like our certified rack inspectors to carry out the inspection for you?

Talk to us about it! Tel. 01495 707222

L / U-PROFILE COLLISION PROTECTION

ARTICLE NO. L-SHAPE = 4749, 9870 /
U-SHAPE = 4748, 9668

- Heights: 40 cm / 80 cm incl. 4 bolt anchors
- Painted in yellow with black signal stripes
- Corner rack protection to protect the outer uprights from accidental impact by lifting equipment such as forklift trucks, ants, etc
- tested according to DIN EN 15635

Assembly: Anchor the collision protection to the floor using the 4 bolt anchors supplied.

CRASH PROTECTION RAIL

ARTICLE NO. 40 cm = 11757, 11758, 11759, 5434, 11760
80 cm = 11761, 11762, 11763, 11764, 11765

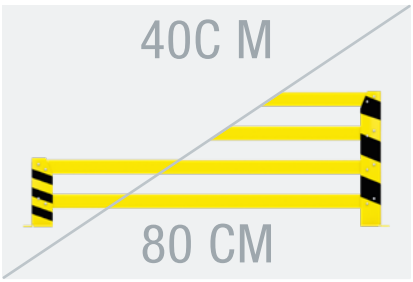

- Material thickness: 4 mm
- Height: 40 cm / 80 cm
- Lengths: 93 cm / 123 cm / 193 cm / 253 cm / 360 cm
- Painted in yellow with black signal stripes
- Protection against accidental collision, e.g. with industrial trucks
- tested according to DIN EN 15635

Assembly: Anchor the crash protection rail to the floor using the 8 bolt anchors supplied (4 on each side).

CRASH PROTECTION BOLLARD

ARTICLE NO. 10136

- Height: 120 cm
- Weight: 19 kg
- Diameter: 16 cm
- Foot plate with 25 x 25 cm
- Painted in yellow with black signal stripes
- Protection against accidental collision, e.g. with industrial trucks

Assembly: Anchor crash protection bollard to the floor using the 4 bolt anchors supplied.

MAGNETIC TAPE

ARTICLE NO. 9590, 9591

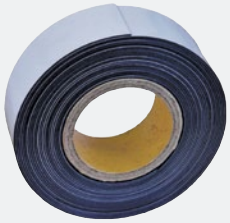

- Magnetic tape for labelling racks or e.g. car bodies, machines, etc.
- Dimensions: L 10 m / W 5 cm or W 10 cm / T 1.5 mm
- Reusable
- Easy cutting to size with standard scissors

RUBBER STRIP

ARTICLE NO. 4013, 4014

- Non-slip supports for cantilevers
- Protects stored goods from damage and slipping
- Is glued to the cantilevers
- Thickness: 3 mm

CANTILEVER SEPARATOR

ARTICLE NO. painted = 11960-10, 11960-25, 11960-100
galvanised = 11960-vz-10, 11960-vz-25, 11960-vz-100

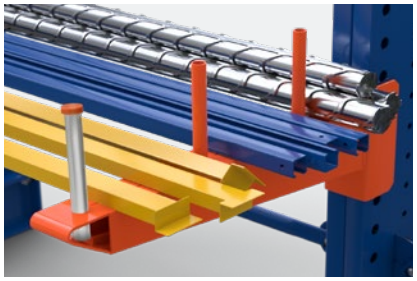

- Painted and galvanised
- For stacking and dividing goods on cantilevers
- Is put on the cantilever and is self-fixing

WOODEN SHELF

ARTICLE NO. 71220, 71222, 71221, 71223

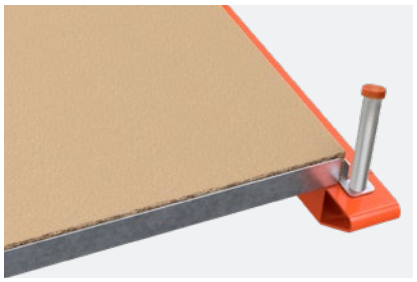

- For unit widths of 100 cm and 150 cm
- 50 cm and 100 cm deep
- Material thickness 38 mm
- incl. fixing bracket set for securing your shelves
- For storing pallets, parcels and transport boxes

GALVANISED MESH SHELF

ARTICLE NO. 89728, 89731, 89729, 89731

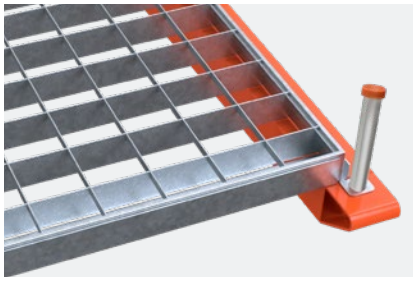

- For unit widths of 100 cm and 150 cm
- 50 cm and 100 cm deep
- Material thickness 2 mm
- galvanised, incl. fixing bracket set for securing your shelves
- For storing drums, buckets and liquids

TOPREGAL®

TOPREGAL UK Ltd.
Carlton Drive Pen Y Fan Industrial Estate
Crumlin Newport | Gwent NP11 4EA

01495 707222 | info@topregal.co.uk
www.topregal.co.uk

V 27.10.21