TECMASCHIN®

OPERATING INSTRUCTIONS

Battery hand strapping tool

HU-P1316

Please read this manual before using the product and follow the instructions it contains!

CONTENT

GENERAL

Foreword 3
Safety instructions 3
Technical data 4
Main components 4
Operating instructions 5

MAINTENANCE & WARRANTY

Maintenance and repair 6
Troubleshooting 7
Packing and disposal 7
Warranty 7

FOREWORD

Congratulations on the purchase of your new HU-P1316 electric hand strapping tool. The easy-to-use battery-powered device is made of high quality materials, specially designed for durable and reliable use. For your own safety and for the correct operation of the strapping tool, please be sure to read and follow these operating instructions before using it.

It is best to keep these operating instructions. Check the device for transport damage. Damaged strapping tools should not be put into use.

The HU-P1316 is used for electrical strapping and packaging of various packages and goods. Improper handling may result in injury or damage to the machine. The operator / user must ensure correct use, making sure that it is only used by trained and authorized persons.

SAFETY INSTRUCTIONS

Please read the instructions carefully, failure to do so may result in injury during operation.

- Only trained personnel may use this device.
- Only use the strapping tool if you have a firm footing.
- The device should not be used by mentally or physically impaired persons.
- Only use high-quality strapping tape that is suitable for this device. Pay particular attention to width, thickness and tensioning force.
- Charge the battery only in dry rooms, at room temperature.
- Keep the device away from water, especially the battery.
- Remove the batteries before any maintenance.
- Use the device only at ambient temperatures between 5 °C - 45 °C.
- Wear safety glasses when using the device.
- Keep fingers away from blade and heating elements during use.
- Do not overstretch the strapping. Torn straps can cause property damage and serious injury.
- Bystanders should keep their distance if possible.
- Contamination of the device or on the strapping band can influence the result.
- Use only fully functional strapping tools.

TECHNICAL DATA

Type	Unit	Value
Size	(mm)	340 x 130 x 118
Weight	(kg)	3,2
Battery	(V/Ah)	12 / 4
Tension up to	(N)	2800
Tensioning speed	(mm/s)	100 – 200
Strip width	(mm)	13 – 16
Strip thickness	(mm)	0,5 – 1,2

Usable strapping: PET polyethylene / PP polypropylene

MAIN COMPONENTS

No.	Name
1	Battery box
2	Lever
3	Welding button
4	Tension knob
5	LED light
6	DC5 5 Socket
7	Power-on toggle switch

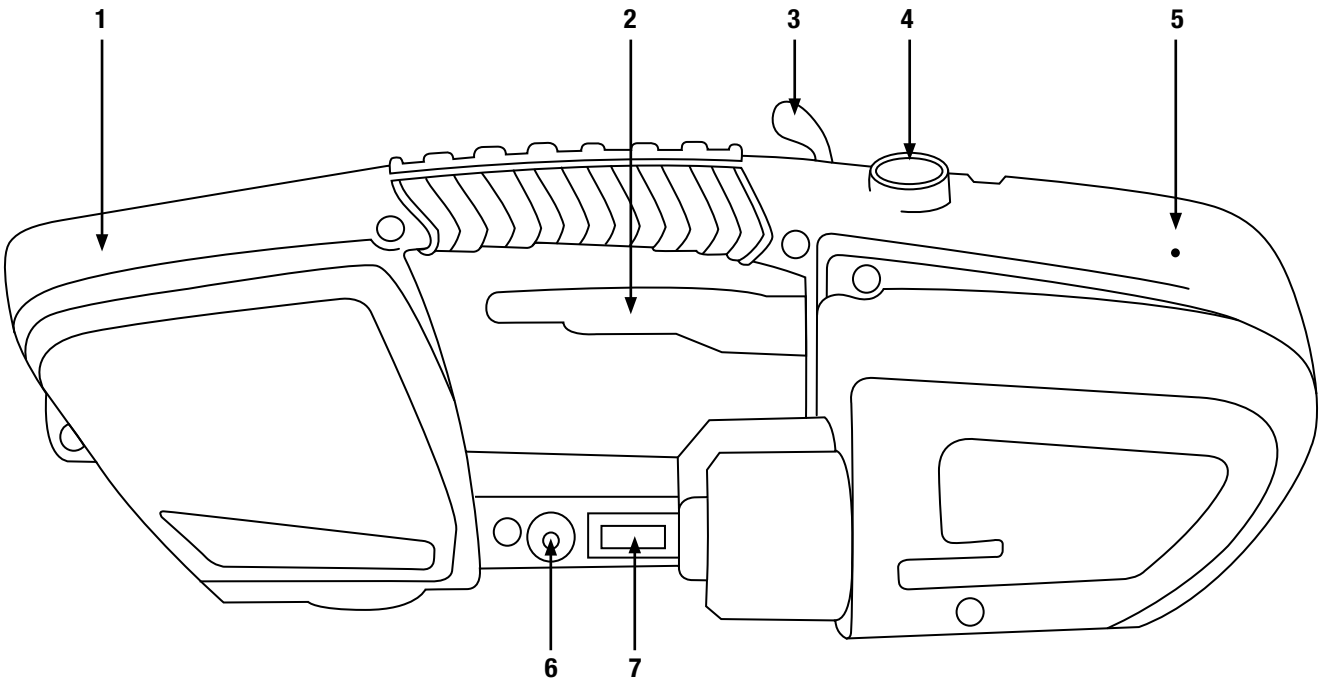

OPERATING INSTRUCTIONS

BEFORE THE FIRST USE:

For safety reasons, the HU-P1316 hand strapping tool and the spare battery pack arrive discharged. Fully charge the batteries.

1. Pull the battery box cover up in the direction of the arrow.
2. When the battery is inserted, the current charging status is briefly indicated by a colored LED light on the top.

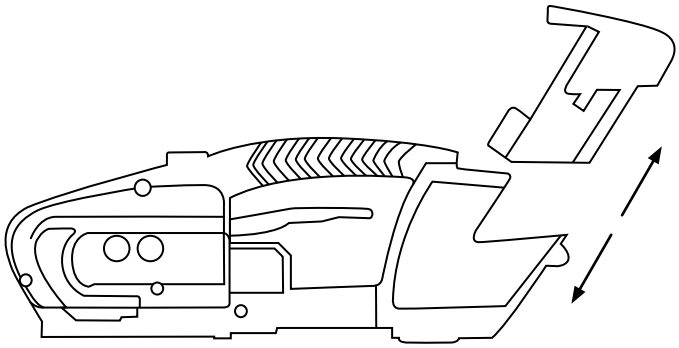

LED STATUS INDICATION

Color	Status
Blue	Ready for use
Red flashing	Low battery power
Red glow	Machine error
Violet luminous	Work finished

Remove discharged batteries and recharge them to make the device ready for use again.

If you use PP strapping, replace the internal spring with the enclosed one. See section „Adjustment of the welding pressure“ for this.

WELDING TIME ADJUSTMENT

1. Adjust the welding time if the strapping melts too much or the band does not hold.
2. To do this, turn the right control clockwise to increase the welding time.

ADJUSTMENT OF THE TENSIONING FORCE

1. Adjust the tensioning force if the strapping is too loose or too taut.
2. To do this, turn the left control clockwise to increase the tensioning force.

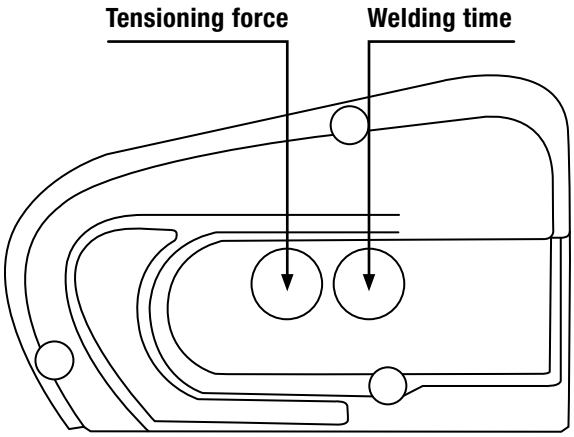

Start with a low welding time and a low tension force and slowly approach the desired result to avoid damage to the fabric and injury from tearing straps.

STRAPPING PACKAGES

1. Wrap the package to be wrapped with the strapping tape so that the ends overlap.
2. Lift the strap slightly so that you can drive under the strap with the strapping tool. Hold the lever while doing this. Release the lever when the tool is in the correct position.
3. Press the tensioning knob. After you have reached the desired clamping force, release it again.
4. Weld the strap by pressing the welding button. Once the strap is cut, you can remove the strapping tool.
5. Return the tensioning knob to the upper position by guiding the tensioning knob upwards and move the device away from the packaging tape.
6. Check the strapping again for any damage or weak points.

Correct welding

Welding time too short

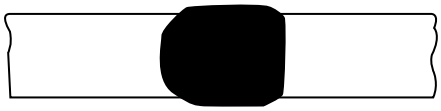

Welding time too long

MAINTENANCE AND REPAIR

Check the functionality of the device regularly. Pay particular attention to correct welding and Tension, as deviations may occur here during prolonged use. In these cases, adjust the controllers. Remove the battery before any repair work in order to exclude possible injury hazards.

ADJUSTMENT OF THE WELDING PRESSURE

If the welding pressure is too low or too high, this can lead to faulty welding.

This circumstance depends on 2 factors:
The material thickness and the strip material itself.

1. Remove the battery from the housing of the device.
2. Open the left cover of the housing by loosening the 3 M4 screws.
3. Move the weld knob to the down position to expose the silver M6 nut above the tension spring.
4. Tighten the nut to decrease the welding power. To increase loosen the nut slightly.

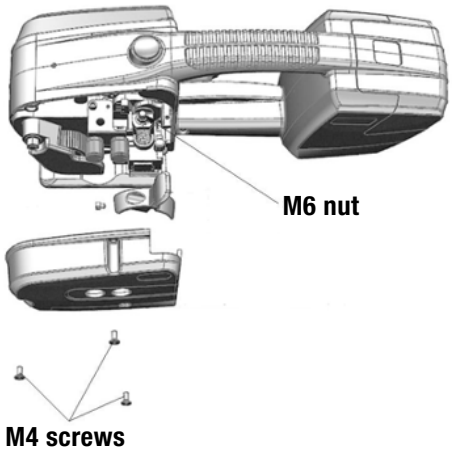

CUTTING FORCE ADJUSTMENT

If the strap is not cut or the blade cuts both strands of the strap, it is necessary to adjust the cutting force.

1. Remove the battery from the housing of the device.
2. Open the left cover of the housing by loosening the 3 M4 screws.
3. Loosen the M4 screw directly on the blade of the device with an Allen key.
4. Remove the blade of the device.
5. Replace the spring behind it.
6. Reassemble the device in reverse order.

Tip: The spring, which is already installed in the device, is used for welding with PET tape. If you use PP tape, replace the spring with the enclosed one before the first use.

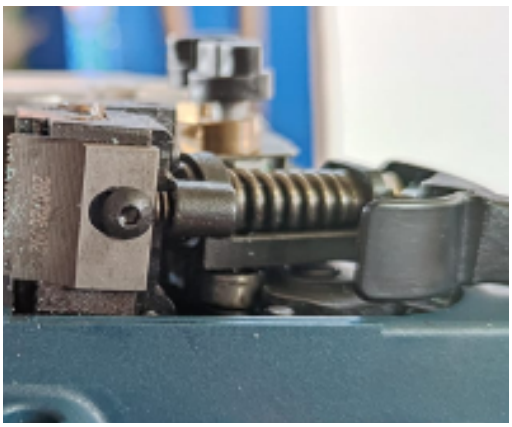

TROUBLESHOOTING

Problem	Cause	Solution
Control lamp does not light up	Battery is empty	Replace the battery with a charged one and charge the dead battery
The device does not weld properly	Welding time too short	Increase the welding time
	Welding pressure too low	Increase the welding pressure
The tape melts too much	Welding time too high	Reduce the welding time
	Welding pressure too high	Reduce the welding pressure
The device does not cut properly	Blade does not cut the tape completely	Adjust the cutting force
The device cuts the entire tape	Blade moves down too far	Reduce the cutting force
Red LED lights up	Tape is stuck in the device	Remove the battery, cut the tape. Open the device and remove the stuck tape
	The motor does not turn	Contact the manufacturer

PACKING AND DISPOSAL

PACKAGING

The packaging and individual components are made of recyclable materials. In detail these are:
PE (polyethylene) films and bags, cardboard packaging. We recommend keeping the packaging at least during the warranty period.

DISPOSE OF OLD EQUIPMENT

OLD DEVICES MUST NOT BE DISPOSED OF WITH WASTE!
If the device can no longer be used, every consumer is required by law to dispose of old devices separately from household waste, e.g., at a collection point in his or her municipality / district.
This ensures that old appliances are recycled properly and that negative effects on the environment are avoided. For this reason, electrical appliances are marked with the adjacent symbol.

WARRANTY

The warranty of one year from the date of invoice covers defects in material, workmanship or design.
Damage due to natural wear and tear, improper handling or unauthorized modification is not covered by the warranty.

TECMASCHIN®

TOPREGAL UK Ltd.
Carlton Drive Pen Y Fan Industrial Estate
Crumlin Newport | Gwent NP11 4EA

01495 707222 | info@topregal.co.uk
www.topregal.co.uk

V 28.04.21